WARCO

OPERATOR'S MANUAL

WM280V-F

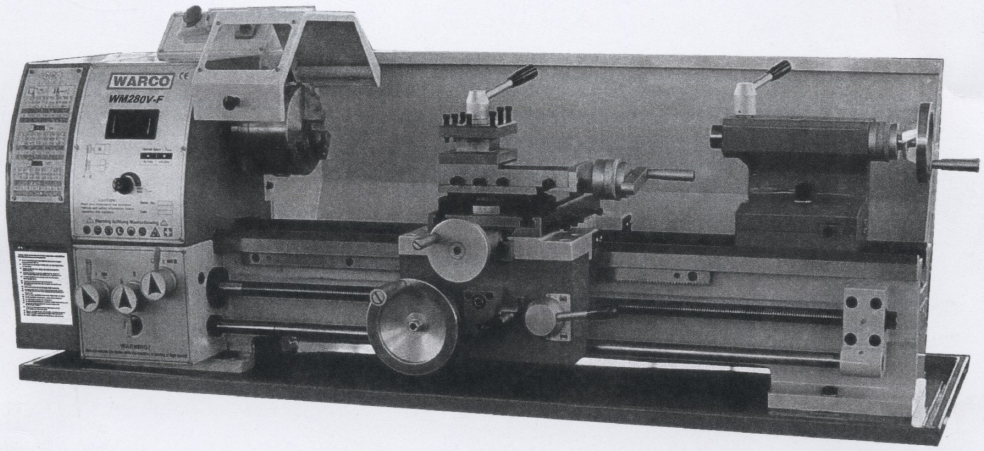

Warren Machine Tools Ltd

Warco House, Fisher Lane, Chiddingfold,Surrey GU84TD

Tel: 01428 682929 Fax: 01428 685870

E-mail: warco@warco.co.uk

Web: www.warco.co.uk

NOTE

The information contained in this handbook is intended as a guide to the operation of these machines and does not form part of any contract. The data it contains has been obtained from the machine manufacturer and from other sources. Whilst every effort has been made to ensure the accuracy of these transcriptions it would be impracticable to verify each and every item. Furthermore, development of the machine may mean that the equipment supplied may differ in detail from the descriptions herein. The responsibility therefore lies with the user to satisfy himself that the equipment or process described is suitable for the purpose intended.

LIMITED WARRANTY

Warco Machine Tools Ltd makes every effort to assure that its products meet high quality and durability standards and warrants to the original retail consumer/purchaser of our products that each product be free from defects in materials and workmanship as follow: 1 YEAR LIMITED WARRANTY ON ALL PRODUCTS UNLESS SPECIFIED OTHERWISE. This Warranty does not apply to defects due directly or indirectly to misuse, abuse, negligence or accidents, normal wear-and tear, repair or alterations outside our facilities, or to a lack of maintenance.

We shall in no event be liable for death, injuries to persons or property or for incidental, contingent, special, or consequential damages arising from the use of our products.

To take advantage of this warranty, the product or part must be returned to us for examination, postage prepaid. Proof of purchase date and an explanation of the complaint must accompany the merchandise. If our inspection discloses a defect, we will either repair or replace the product, or refund the purchases price if we cannot readily and quickly provide a repair or replacement, if you are willing to accept a refund. We will return repaired product or replacement at WARCO' expense, but if it is determined there in no defect, or that the defect resulted from causes not within the scope of WARCO' warranty, then the user must bear the cost of storing and returning the product.

The manufacturers reserve the right to change specifications at any time as they continually strive to achieve better quality equipment.

Copyright. The copyright of this instruction book is the property of WARCO Machinery and may not be reproduced or copied without prior consent of WARCO Machinery.

⚠WARNING!

Read and understand the entire instruction manual before attempting set-up or operation of this machine!

1. **This machine is designed and intended for use by properly trained and experienced personnel only.** If you are not familiar with the proper safe use of lathes, do not use this machine until proper training and knowledge has been obtained.

2. **Keep guards in place.** Safety guards must be kept in place and in working order.

3. **Remove adjusting keys and wrenches.** Before turning on machine, check to see that any adjusting wrenches are removed from the tool.

4. **Reduce the risk of unintentional starting.** Make sure switch is in the OFF position before plugging in the tool.

5. **Do not force tool.** Always use a tool at the rate for which it was designed.

6. **Use the right tool.** Do not force a tool or attachment to do a job for which it was not designed.

7. **Maintain tools with care**. Keep tools sharp and clean for best and safest performance. Follow instructions for lubrication and changing accessories.

8. **Always disconnect the machine from the power source before adjusting or servicing.**

9. **Check for damaged parts**. Check for alignment of moving parts, breakage of parts, mounting, and any other condition that may affect the tools operation. A guard or any part that is damaged should be repaired or replaced.

10. **Turn power off. Never leave a machine unattended.** Do not leave a machine until it comes to a complete stop.

11. **Keep work area clean,** Cluttered areas and bench invite accidents.

12. **Do not use in a dangerous environment.** Do not use power tools in damp or wet locations, or expose them to rain. Keep work area well lighted.

13. **Keep children and visitors away.** All visitors should be kept a safe distance from the work area.

14. **Make the workshop child proof.** Use padlocks, master switches, and remove starter keys.

15. **Wear proper apparel.** Loose clothing, gloves, neckties, rings, bracelets, or other jewelry may get caught in moving parts. Non-slip footwear is recommended. Wear protective hair covering to contain long hair. Do not wear any type of glove.

16. **Always use safety glasses.** Every day glasses only have impact resistant lenses; they are not safety glasses.

17. **Do not overreach.** Keep proper footing and balance at all times.

18. **Don not put hands near the cutter while the machine is operating.**

19. **Do not perform any set-up work while machine is operating.**

20. **Read and understand all warnings posted on the machine.**

21. **This manual is intended to familiarize you with the technical aspects of this lathe**. It is not, nor was it intended to be a training manual.

22. **Failure to comply with all of these warnings may result in serious injury.**

23. **Some dust created** by power sanding, sawing, grinding, drilling and other construction activities contains chemicals known to cause cancer, birth defects or other reproductive harm. Some examples of these chemicals are lead from lead based paint; crystalline silica from bricks and cement and other masonry products.

24. **Your risk from those exposures** varies, depending on how often you do this type of work. To reduce your exposure to these chemicals: work in a well ventilated area, and work with approved safety equipment, such as those dust masks that are specifically designed to filter our microscopic particles.

SPECIFICATIONS:

Capacities:	**WM280V-F**
Swing Over Bed	280mm
Swing Over Cross Slide	165mm
Distance Between Centers	700mm
Width of Bed	180mm
Headstock:	
Hole Through Spindle	26mm
Taper in Spindle Nose	MT4
Number of Spindle Speeds	Variable
Range of Spindle Speeds	50-1850RPM
Feeding and Threading:	
Number of Metric Threads	18
Range of Metric Threads	0.2~3.5mm
Number of Imperial Threads	21
Range of Imperial Threads	8~56 T.P.I.
Range of Corss Feed	0.02~0.28mm/r
Range of Longitudinal Feed	0.07~0.40mm/r
Compound and Carriage:	
Tool Post Type	4-Way
Maximum Compound Slide Travel	80mm
Maximum Cross Slide Trave	140mm
Maximum Carriage Travel	560mm
Tailstock:	
Tailstock Spindle Travel	80mm
Taper in Tailstock Spindle	MT2
Miscellaneous:	
Main Motor	1.1KW
Dimension:	
Length	1400mm
Width	700mm
Height	680mm
Weight	210Kgs

TABLE OF CONTENTS

LIMITED WARRANTY..... 1
SAFETY WARNINGS 2
SPECIFICATIONS 3
TABLE OF CONTENTS 4
CONTENTS OF SHIPPING CONTAINER 5
UNCRATING AND CLEAN-UP 6
FOUNDATION DRAWING 6
GENERAL DESCRIPTION..... 7
CONTROLS..... 9
OPERATION 11
LATHE ACCESSORIES.....16
ADJUSTMENT. 18
LUBRICATION 19
ELECTRICAL CONNECTION 20
MAINTENANCE 21
TRUBLE SOLUTION 22

⚠ WARNING!

Read and understand the entire contents of this Manual before attempting set-up or operation! Failure to comply may cause serious injure!

CONTENTS OF SHIPPING CONTAINER

1 WM280V-F Lathe
2 Test Flow Chat
1 Toolbox & Tools

TOOLBOX CONTENTS (Fig. 01)

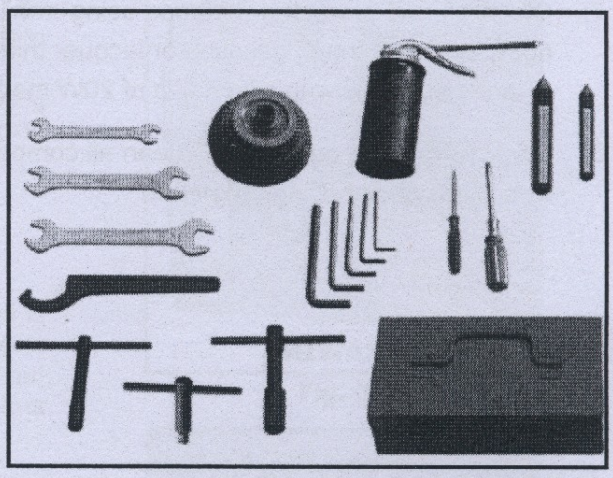

Fig. 01

1 Dead Center MT4
1 Dead Center MT2
3 External Jaw
1 Oil Gun
1 Spanner for Spindle Adjustment
1 Cross Screwdriver
1 Flat Screwdriver
1 Key for 3-Jaw Chuck
1 Tool Post Square Wrench
5 Hex Socket Wrench 3,4,5,6,8mm
3 Double End Head Wrench 8-10mm, 10-12mm, 17-19mm
1 One Sets of Change Gears

UNCRATING AND CLEAN-UP

1. Finish removing the wooden crate from around the lathe
2. Check all the accessories of the machine tool according to the packing list.
3. Unbolt the lathe from the shipping crate bottom.
4. Choose a location for the lathe that is dray, has good lighting and has enough room to be able to service the lathe on all four sides.
5. With adequate lifting equipment, slowly raise the lathe off the shipping crate bottom. **Do not lift by spindle**. Make sure lathe is balanced before moving to sturdy bench or stand.
6. To avoid twisting the bed, the lathe's location must be absolutely flat and level. Bolt the lathe to the stand (if used). If using a bench, through bolt for best performance.
7. Clean all rust protected surfaces using a mild commercial solvent, kerosene or diesel fuel. Do not use paint thinner, gasoline or lacquer thinner. These will damage painted surfaces. Cover all cleaned surfaces with a light film of 20W machine oil.
8. Remove the end gear cover. Clean all components of the end gear assembly and coat all gears with a heavy, non-slinging grease.

FOUNDATION DRAWING

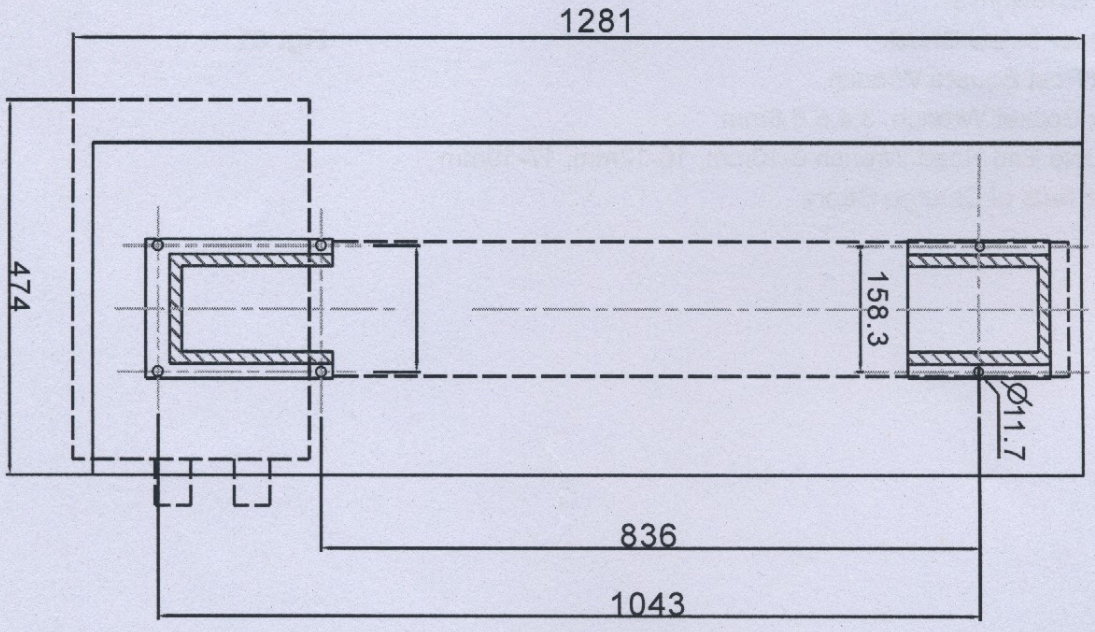

Fig. 02

GENERAL DESCRIPTION

Lathe Bed (Fig. 03)

The lathe bed is made of high-grade iron. By combining high cheeks with strong cross ribs, a bed of low vibration and rigidity is produced. It integrates the headstock and drive unit, for attaching the carriage and leadscrew. The two precision-ground V – sideways, re-enforced by heat hardening and grinding, are the accurate guide for the carriage and tailstock. The main motor is mounted to the rear of the left side of the bed.

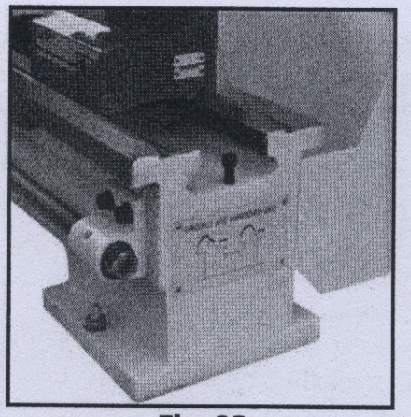

Fig. 03

Headstock (Fig. 04)

The headstock is cast from high grade, low vibration cast iron. It is bolted to the bed with four screws. The headstock houses the main spindle with two precision taper roller bearings and the drive unit.
The main spindle transmits the torque during the turning process. It also holds the workpieces and clamping devices. (e.g. 3-jaw chuck).

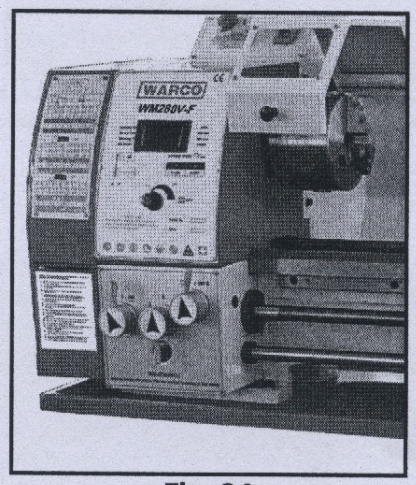

Fig. 04

Gear Box (Fig. 05)

The gear box is made from high quality cast iron and is mounted on the left side of the machine bed. It used to select the feeds for straight turning as well as for thread cutting. In order to achieve certain thread pitches, it is necessary to replace the change gears.

The torque of the work spindle is transmitted to the feed gear and thus to the leadscrew.

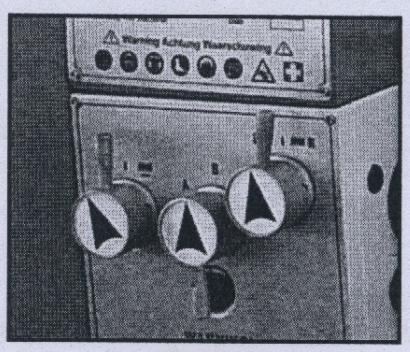

Fig. 05

Carriage (Fig. 06)

The carriage is made from high quality cast iron. The slide parts are smoothly ground. They fit the V on the bed without play. The lower sliding parts can be easily and simply adjusted. The cross slide is mounted on the carriage and moves on a dove tailed slide. Play in the cross slide may be adjusted with the gibs.

Move the cross slide with its conveniently positioned handwheel. There is a graduated collar on the handwheel.

The top slide, mounted on the cross slide, can be rotated 360°. The top slide and the cross slide travel in dove tailed slides and have gibs, adjustable nuts, and graduated collars.

A four way tool post is fitted on the top slide and allows four tools to be clamped. Loosen the center clamp handle to rotate any of the four tools into position.

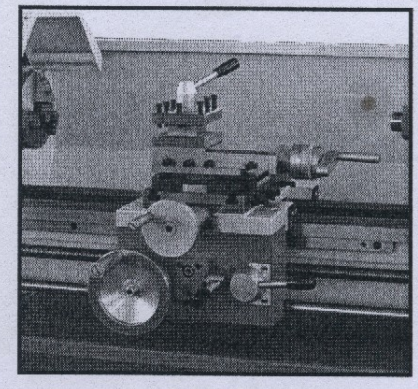

Fig.06

Apron (Fig. 07)

The apron is mounted on the bed. It houses the half nut with an engaging lever for activating the automatic feed. The half nut gibs can be adjusted from the outside.

A rack, mounted on the bed, and a pinion operated by handwheel on the carriage allow for quick travel of the apron.

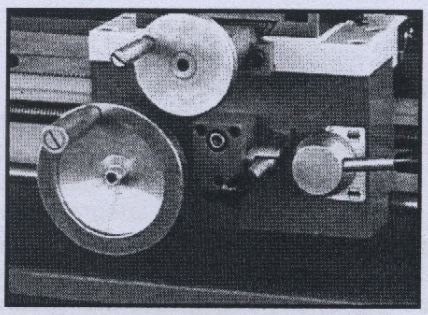

Fig.07

Leadscrew (Fig. 08)

The leadscrew is mounted on the front of the machine bed. It is connected to the gear box at the left for automatic feed and is supported by bearing on both ends. The two groove nuts (A, Fig. 10) on the right end are designed to take up play on the leadscrew.

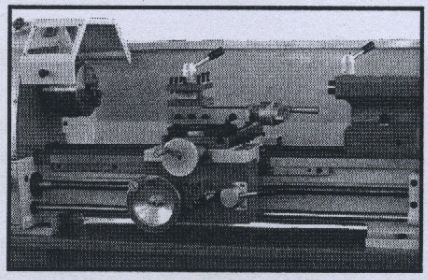

Fig. 08

Tailstock (Fig. 09)

The tailstock slides on a V way and can be clamped at any location. The tailstock has a heavy-duty spindle with a Morse taper No. 2 socket and a graduated scale. The spindle can be clamped at any location with a clamping lever. The spindle is moved with a handwheel at the end of the tailstock.

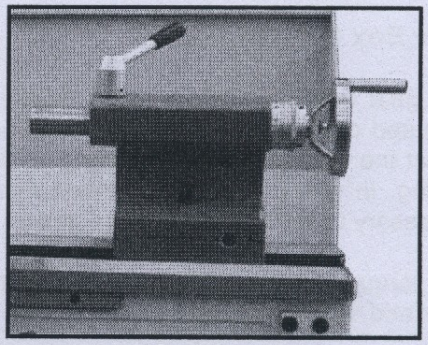

Fig. 09

NOTE:
Fit the securing screw (B, Fig. 10) at the end of the lathe be in order to prevent the tailstock from falling off the lathe bed.

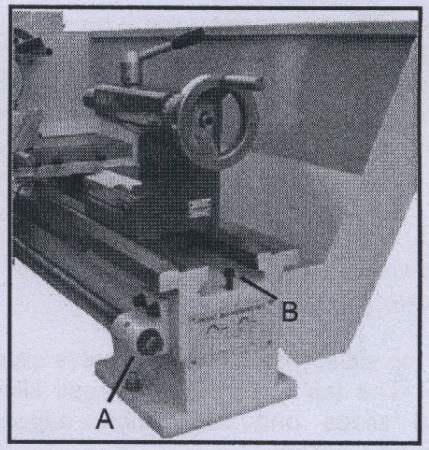

Fig. 10

CONTROLS

1. Change-over Switch (A, Fig. 11)

After the machine is switched on, turn the switch to "F" position for counter-clockwise spindle rotation (forward). Turn the switch to "R" position for clockwise spindle rotation (reverse). "0" position is OFF and the spindle remains idle.

2. Emergency Button ON/OFF Switch (B, Fig. 11)

The machine is switched on and off with ON/OFF button. Depress to stop all machine functions. To restart, lift the cover and press ON button.

3. Variable Speed Control Switch (C, Fig. 11)

Turn the switch clockwise to increase the spindle speed. Turn the switch counter-clockwise to decrease the spindle speed. The possible speed range is dependent from the position of the drive belt.

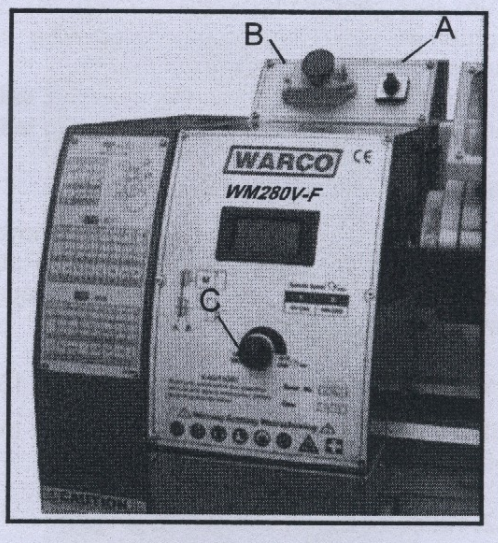

Fig. 11

4. Feed Direction Selector (D, Fig. 12)

Select carriage travel direction when the chuck is rotating in the forward direction or counter-clockwise as viewed from the front of the chuck.

5. Feed Rate Selector (E, Fig. 12)

Set the desired feed or thread rates.

6. Feed/Thread Selector (F, Fig. 12)

Select the handle for shift left to thread.
Select the handle for shift right to feed.

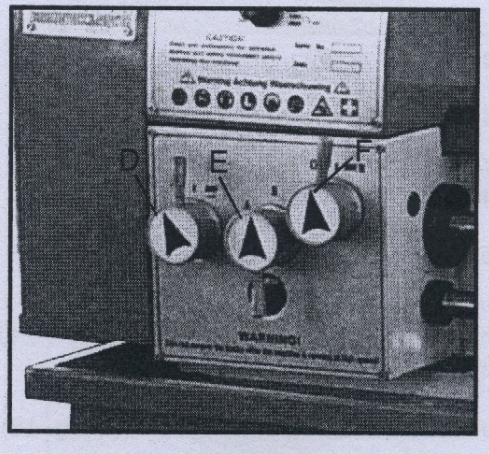

Fig. 12

7. Compound Rest Lock

Turn two hex nuts (G, Fig. 13) clockwise to lock and counter -clockwise to unlock.

8. Compound Slide Lock

Turn hex socket cap screws (H, Fig. 13) clockwise, and tighten to lock. Turn counter-clockwise to loosen.

9. Cross Slide Lock

Turn hex socket cap screw (I, Fig. 13) clockwise and tighten to lock. Turn counter-clockwise and loosen to unlock.

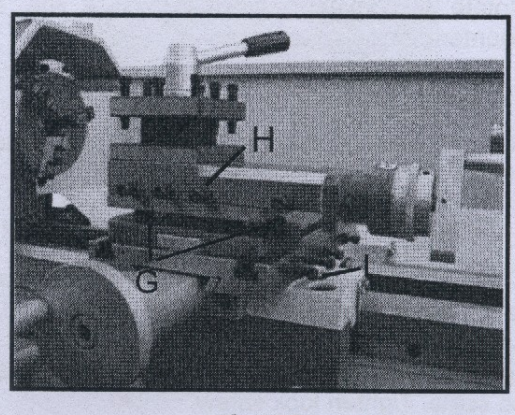

Fig. 13

9. Carriage Lock

Turn hex socket cap screw (A, Fig.14) clockwise and tighten to lock. Turn counter-clockwise and loosen to unlock.
Caution: carriage lock screw must be unlocked before engaging automatic feeds or damage to lathe may occur.

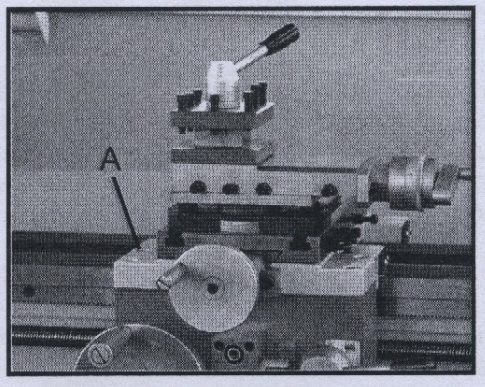

Fig. 14

10. Longitudinal Traverse (B, Fig. 15)

Rotate hand wheel clockwise to move the apron assembly toward the tailstock (right). Rotate the hand wheel counter-clockwise to move the apron assembly toward the headstock (left).

11. Cross Traverse Handwheel (C, Fig. 15)

Clockwise rotation moves the cross slide toward the rear of the machine.

12. Half Nut Engage Lever (D, Fig. 15)

Move the lever down to engage. Move the lever up to disengage.

13. Compound Rest Traverse Lever (E, Fig. 15)

Rotate clockwise or counter-clockwise to move or position.

14. Tool Post Clamping Lever (F, Fig. 15)

Rotate counter-clockwise to loosen and clockwise to tighten. Rotate the tool post when the lever is unlocked.

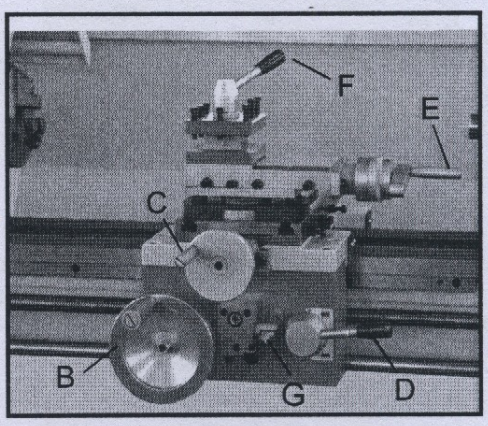

Fig. 15

15. Feed axis Selector (G, Fig. 15)

Push lever (G,Fig.15) to the left and down to engage cross feed Pull lever to the right and up to engage longitudinal feed.

16. Tailstock Clamping Screw (H, Fig. 16)

Turn hex nut clockwise to lock and counter-clockwise to unlock.

17. Tailstock Quill Clamping Lever (I, Fig. 16)

Rotate the lever clockwise to lock the spindle and counter-clockwise to unlock.

18. Tailstock Quill Traverse Handwheel (J, Fig. 16)

Rotate clockwise to advance the quill. Rotate counter-clockwise to retract the quill

19. Tailstock Off-set Adjustment (K, Fig. 16)

Three sets screws located on the tailstock base are used to off-set the tailstock for cutting tapers. Loosen lock screw on tailstock end. Loosen one side set screw while tightening the other until the amount of off-set is indicated on scale. Tighten lock screw.

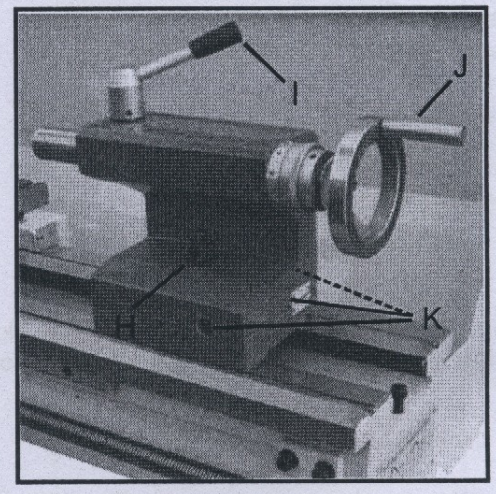

Fig. 16

OPERATION

Replacement of Chuck

The head spindle holding fixture is cylindrical. Loose three set screws and nuts (A, Fig.17, only two are shown) on the lathe chuck flange to remove the chuck. Position the new chuck and fix it using the same set screws and nuts.

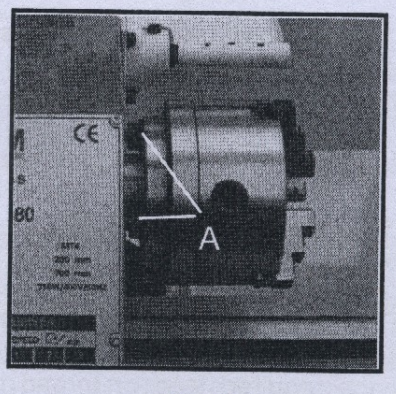

Fig. 17

Tool Set-Up

Clamp the turning tool into the toolholder.

The tool must be clamped firmly. When turning, the tool has a tendency to bend under the cutting force generated during the chip formation. For best results, tool overhang should be kept to a minimum of 3/8" or less.

The cutting angle is correct when the cutting edge is in line with the center axis of the work piece. The correct height of the tool can be achieved by comparing the tool point with the point of the center mounted in the tailstock. If necessary, use steel spacer shims under the tool to get the required height. (Fig. 18)

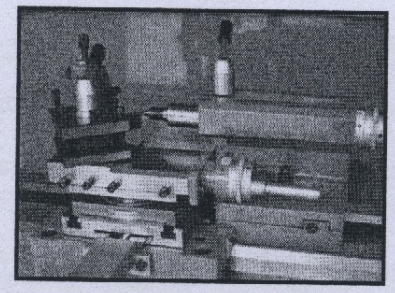

Fig. 18

Change H/L Speed

1. Unscrew the two fastening screws (B, Fig.19) and remove the protective cover.

2. To selection A or B according to your requirement, A is low speed, B is high speed. (Fig. 20)

Caution: we suggestion our customers to select low speed position to work, it is could provides stronger torque for working!

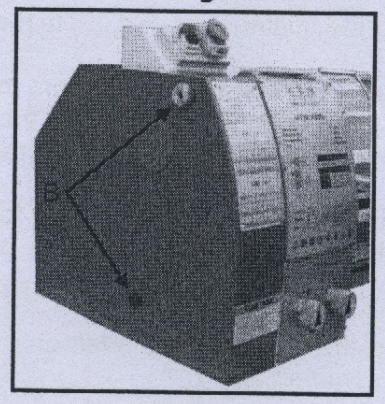

Fig. 19

Belt Adjusted

Loosen the four nuts and screws (C, Fig. 20) to remove the plate of mounting motor and position!

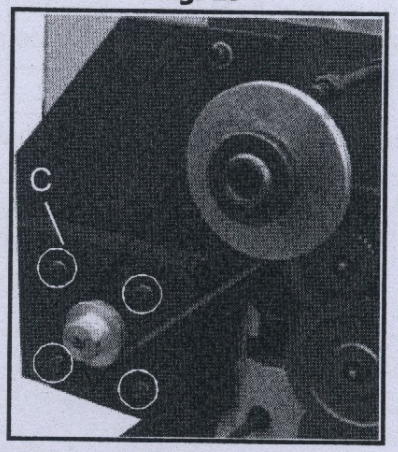

Fig. 20

Manual Turning

Apron travel, cross travel, and top slide handwheel can be operated for longitudinal or cross feeding. (Fig.21)

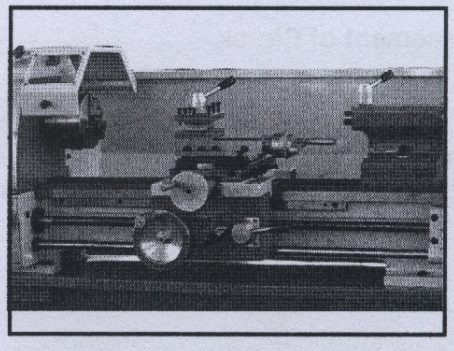

Fig. 21

Longitudinal Turning with Auto-Feed

1. Set the selector knob (A, Fig.22) to select the feed direction and feed speed.

2. Use the table (B, Fig.22) on the lathe for selecting the feed speed or the thread pitch. Adjust the change gear if the required feed or thread pitch cannot be obtained with the installed gear set.



Fig. 22

Change Gears Replacement

1. Disconnect the machine from the power source.

2. Unscrew the two fastening screws and remove the protective cover.

3. Loosen the locking screw (C, Fig.23) on the quadrant.

4. Swing the quadrant (D, Fig.23) to the right.

5. Unscrew the bolt (E, Fig.23) from the leadscrew or the square bolts (F, Fig.23) from the quadrant bolts in order to remove the change gears from the front.

6. Install the gear couples according to the thread and feed table (Fig.24) and screw the gearwheels onto the quadrant again.

7. Swing the quadrant to the left until the gearwheels have engaged again.

8. Readjust gear backlash by inserting a normal sheet of paper as an adjusting or distance aid between the gearwheels.

9. Immobilize the quadrant with the locking screw.

10. Install the protective cover of the headstock and reconnect the machine to the power supply.

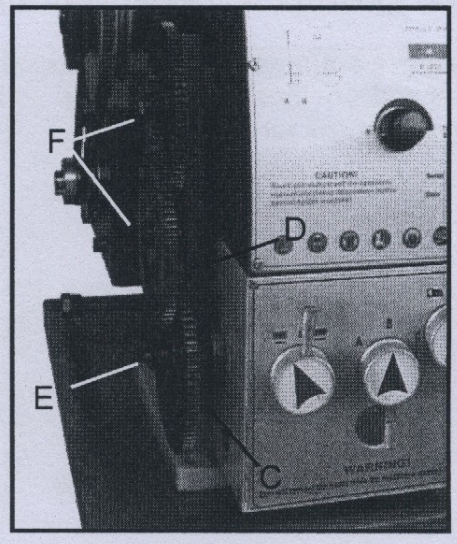

Fig. 23

THREADING AND FEEDING TABLE FOR LATHE

METRIC

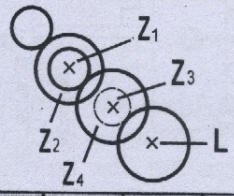

Z1 Z2 / Z4 Z3 / L	45 75 / 80 20 / H 85	45 75 / 80 30 / H 85	30 70 / 80 50 / H 85	30 75 / 80 50 / H 60	45 75 / 60 50 / H 80
C	0.07	0.10	0.12	0.16	0.25
A	0.14	0.21	0.25	0.32	0.5
B	0.28	0.42	0.5	0.65	/
C	/	/	/	/	0.03
A	0.017	0.026	0.03	0.036	0.06
B	0.035	0.052	0.06	0.072	0.12

mm

Z1 Z2 / Z4 Z3 / L	H 60 / 20 75 / 80 H	H 60 / 30 80 / 75 H	H 60 / 50 80 / 75 H	H 60 / 50 80 / 60 H	H 50 / 60 80 / 60 H	H 50 / 70 80 / 60 H
C	0.2	0.3	0.5	0.62	0.75	0.88
A	0.4	0.6	1.0	1.25	1.5	1.75
B	0.8	1.2	2.0	2.5	3.0	3.5

n / 1"

Z1 Z2 / Z4 Z3 / L	H 60 / 60 70 / 65 H	H 50 / 60 85 / 65 H	H 60 / 50 75 / 60 H	H 60 / 45 50 / 85 H	H 60 / 50 80 / 65 H	H 70 / 45 60 / 85 H	H 50 / 45 85 / 70 H
C	8	9	9.5	10	11	12	14
A	16	18	19	20	22	24	28
B	32	36	38	40	44	48	56

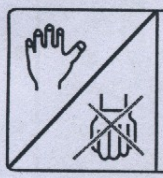

Keep hands out of moving parts of this machine. Do not wear gloves or loose clothes.

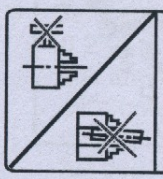

Be sure the key is removed from the chuck and workpiece is completely gripped before rotating the spindle!

INCH

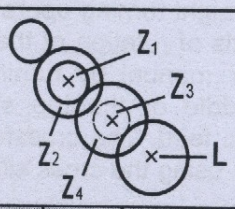

Z1 Z2 / Z4 Z3 / L	30 75 / 80 25 / H 80	40 75 / 70 20 / H 80	40 75 / 70 25 / H 80	40 75 / 80 30 / H 80	40 75 / 70 30 / H 80
C	0.0025	0.003	0.0038	0.004	0.0045
A	0.005	0.006	0.0075	0.008	0.009
B	0.01	0.12	/	/	/
C	/	/	/	/	/
A	0.0015	0.0019	0.0024	0.0025	0.0028
B	0.003	0.0038	0.0048	0.005	0.0056

mm

Z1 Z2 / Z4 Z3 / L	63 75 / 80 45 / H 60	H 60 / 50 63 / 80 H	45 50 / 80 63 / H 60
C	0.5		0.75
A	1.0	1.25	1.5
B	2.0	2.5	3.0

n / 1"

Z1 Z2 / Z4 Z3 / L	H 80 / 30 40 / 60 H	H 70 / 50 75 / 60 H	H 70 / 40 50 / 80 H	H 70 / 40 55 / 80 H	H 55 / 50 75 / 80 H	H 60 / 40 70 / 80 H
C	8	9	10	11	12	14
A	16	18	20	22	24	28
B	32	36	40	44	48	56



Keep hands out of moving parts of this machine. Do not wear gloves or loose clothes.

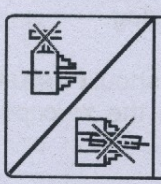

Be sure the key is removed from the chuck and workpiece is completely gripped before rotating the spindle!

Fig. 24

Straight Turning (Fig. 25)

In the straight turning operation, the tool feeds parallel to the axis of rotation of the workpiece. The feed can be either manual by turning the handwheel on the lathe saddle or the top slide, or by activating the automatic feed. The crossfeed for the depth of cut is achieved using the cross slide.

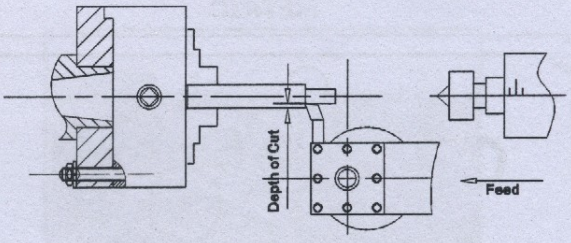

Fig. 25

Facing and Recesses (Fig. 26)

In the facing operation, the tool feeds perpendicular to the axis of rotation of the workpiece. The feed is made manually with the cross slide handwheel. The crossfeed for cut depth is made with the top slide or lathe saddle.

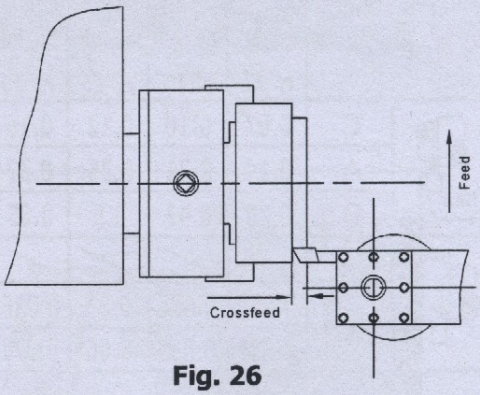

Fig. 26

Turning Between Centers (Fig. 27)

For turning between centers, it is necessary to remove the chuck from the spindle. Fit the M.T.3 center into the spindle nose and the M.T. 2 center into the tailstock. Mount the workpiece fitted with the driver dog between the centers. The driver is driven by a catch or face plate.

Note: Always use a small amount of grease on the tailstock center to prevent center tip form overheating.

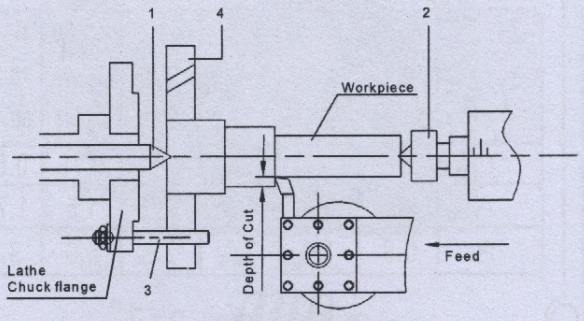

1.Fixed Centre 60° 2.Living Centre 60°
3.Dog Drive Pin 4.Dog Plate

Fig. 27

Taper Turning Using Tailstock Off-Set

Work to a side angle of 5 can be turned by off-setting the tailstock. The angle depends on the length of the workpiece.

To off-set the tailstock, loosen locking screw (A, Fig28) Unscrew the set screw (B, Fig.28) on right end of the tailstock. Loosen the front adjusting screw(C, Fig.28) and take up the same amount by tightening the rear adjusting screw (D, Fig.28) until the desired taper has been reached. The desired cross-adjustment can be read off the scale. (E, Fig.28). First retighten the set screw (B, Fig,28) and then the two (front and rear) adjusting screw to lock the tailstock in position. Retighten the locking screw (A, Fig.28) of the tailstock. The workpiece must be held between to centers and driven by a face plate and driver dog.

After taper turning, the tailstock should be returned to its original position according to the zero position on the scale of tailstock. (E, Fig.28)

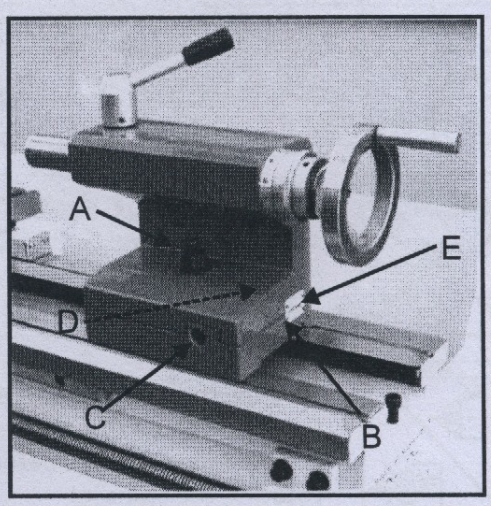

Fig. 28

Taper Turning by Setting the Top Slide

By angling the top slide, tapers may be turned manually with the top slide. (Fig. 29)
Rotate the top slide to the required angle. A graduated scale permits accurate adjustment of the top slide. The crossfeed is performed with the cross slide. This method can only be used for short tapers.

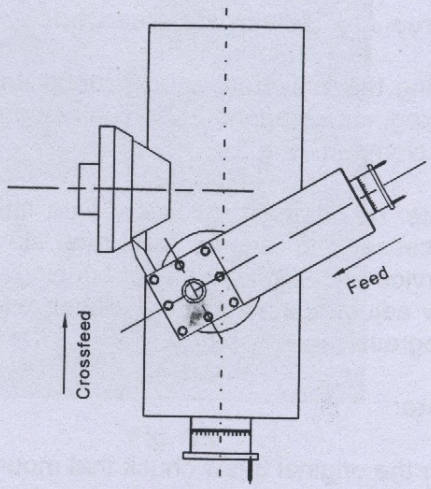

Fig. 29

Thread Cutting

Set the machine up to the desired thread pitch (according to the threading chart, Fig.24). Start the machine and engage the half nut. When the tool reaches the part, it will cut the initial threading pass. When the tool reaches the end of the cut, stop the machine by turning the motor off and at the same time back the tool out of the part so that it clears the thread. Do not disengage the half nut lever. Reverse the motor direction to allow the cutting tool to traverse back to the starting point. Repeat these steps until you have obtained the desired results.

NOTES

Example: Male Thread

- The workpiece diameter must have been turned to the diameter of the desired thread.
- The workpiece requires a chamfer at the beginning of the thread and an undercut at the thread runout.
- The speed must be as low as possible.
- The change gears must have been installed according to the required pitch.
- The thread cutting tool must be exactly the sample shape as the thread, must be absolutely rectangular and clamped so that it coincides exactly with the turning center.
- The thread is produced in various cutting steps so that the cutting tool has to be turned out of the thread completely (with the cross slide) at the end of each cutting step.
- The tool is withdrawn with the leadscrew nut engaged by inverting the change-over switch.
- Stop the machine and feed the thread cutting tool in low cut depths using the cross slide.
- Before each passage, place the top slide approximately 0.2 to 0.3mm to the left and right alternately in order to cut the thread free. This way, the thread cutting tools cuts only on one thread flank with each passage. Keep cutting the thread free until you have almost reached the full depth of thread.

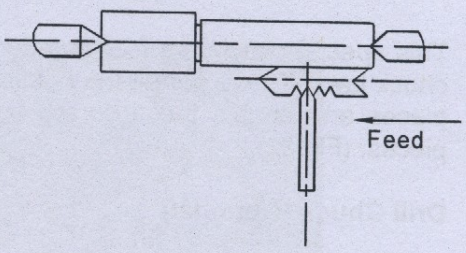

Fig. 30

LATHE ACCESSORIES

Three Jaw Universal Lathe Chuck

Using this universal chuck, round, triangular, square, hexagonal octagonal, and twelve-cornered stock may be clamped. (Fig.31)

Note: new lathes have very tight fitting jaws. This is necessary to ensure accurate clamping and long service life. With repeated opening and closing, the jaw adjust automatically and their operation becomes progressively smoother.

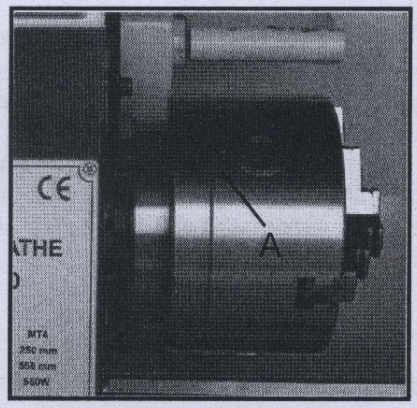

Fig. 31

Note:

For the original 3-jaw chuck that mounted on the lathe, the factory has mounted the chuck in the best way to guarantee the holding accuracy with two "0" mark (A, Fig.) showed on the chuck and chuck flange.

There are two types of jaws: Internal and external jaws. Please note that the number of jaws fit with the number inside the chuck's groove. Do not mix them together. When you are going to mount them, please mount them in ascending order 1-2-3, when you are going to take them out, be sure to take them out in descending order 3-2-1, one by one. After you finished this procedure, rotate the jaws to the smallest diameter and check that the three jaws are well fitted.

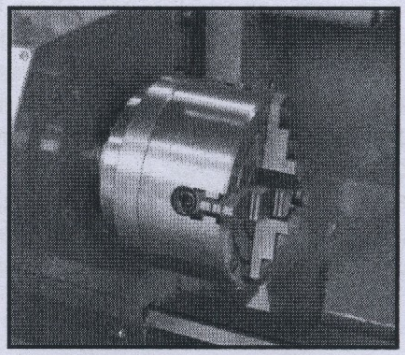

Fig. 32

Four Jaw Independent Lathe Chuck

This special chuck has four independently adjustable chuck jaws. These permit the holding of asymmetrical pieces and enable the accurate set-up of cylindrical pieces. (Fig.32)

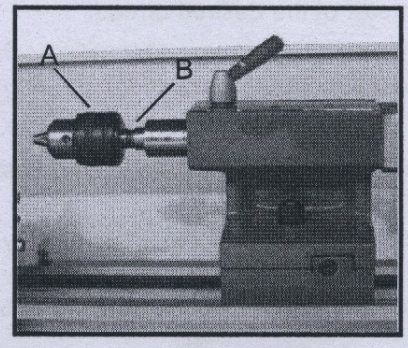

Fig. 33

Drill Chuck (Optional)

Use the drill chuck to hold centering drills and twist drills in the tailstock. (A, Fig.33)

Morse Taper Arbor (Optional)

An arbor is necessary for mounting the drill chuck in the tailstock. It has a No. 2 Morse taper. (B, Fig.33)

Live Center (Optional)

The live center is mounted in ball bearings. Its use is highly recommended for turning at speeds in excess of 600 RPM. (Fig. 34)

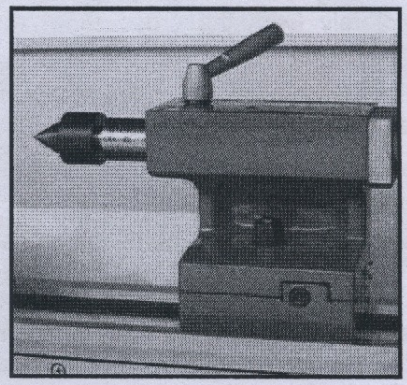

Fig. 34

Steady Rest

The steady rest serves as a support for shafts on the free tailstock end. For many operations the tailstock can not be used as it obstructs the turning tool or drilling tool, and therefore, must be removed from the machine. The steady rest, which function as an end support, ensures chatter-free operation. The steady rest is mounted on the bedways and is secured from below with a locking plate. The sliding fingers require continuous lubrication at the contact points to prevent premature wear. (Fig.35)

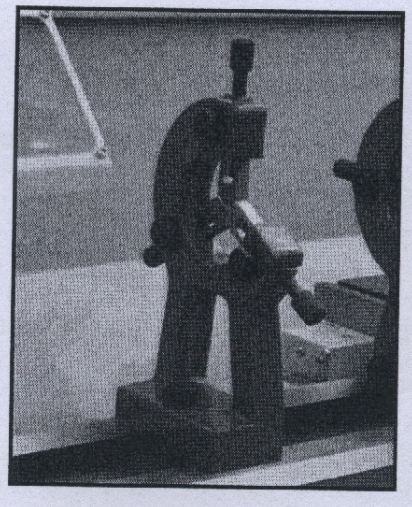

Fig. 35

Setting the Steady Rest

1. Loosen three hex nuts. (A, Fig.36)
2. Loosen knurled screw (B, Fig.36) and open the sliding fingers. (C, Fig.36) until the steady rest can be moved with its finger around the workpiece. Secure the steady rest in position.
3. Tighten knurled screws so that fingers are snug but not tight against the workpiece. Tighten three nuts (A, Fig.36). Lubricate the sliding points with machine oil.
4. When, after prolonged operation, the jaw show wear, the tips of the fingers may be filed or remilled.

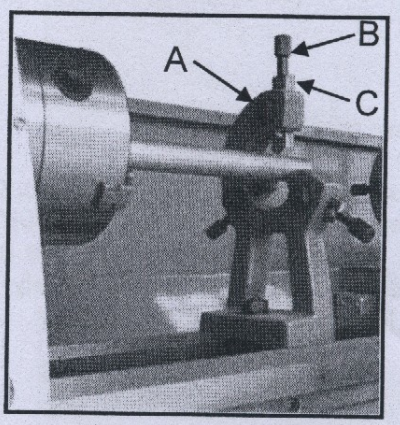

Fig. 36

Follow Rest

The follow rest is mounted on the saddle and follow the movement of the turning tool. Only two sliding fingers are required. The place of the third finger is taken by the turning tool. The follow rest is used for turning operations on long, slender workpieces. It prevents flexing of the workpiece under pressure from the turning tool. (Fig.37)
Set the fingers snug to the workpiece but not overly tight. Lubricate the fingers during operation to prevent premature wear.

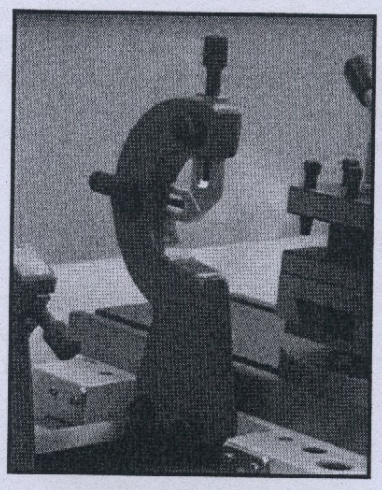

Fig. 37

ADJUSTMENT

After a period time, wear in some of the moving components may need to be adjust

Main Spindle Bearings

The main spindle bearings are adjusted at the factory. If end play becomes evident after considerable use, the bearings may be adjusted.

Loosen two hex socket cap screws (A, Fig.38) in the slotted nut (B, Fig.38) on the back of the spindle. Tighten slotted nut until all end play is taken up. The spindle should still revolve freely. Tighten two hex socket cap screws (A, Fig.38).
Caution: excessive tightening or preloading will damage the bearings.

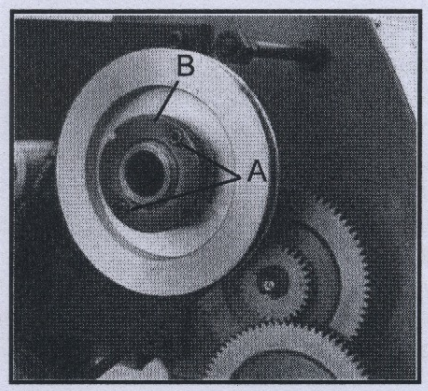

Fig. 38

Adjustment of Cross Slide

The cross slide is fitted with a gib strip(C, Fig.39) and can be adjusted with screws (D, Fig.39) fitted with lock nuts. (E, Fig.39) Loosen the lock nuts and tighten the set screws until slide moves freely without play. Tighten lock nuts to retain adjustment.

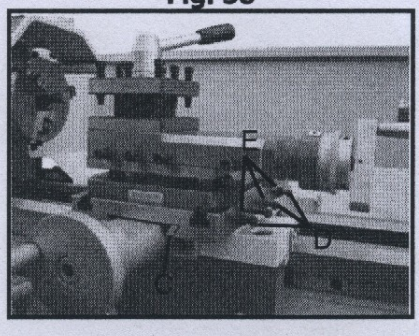

Fig. 39

Adjustment of Top Slide

The top slide is fitted with a gib strip(F, Fig.40) and can be adjusted with screws (G, Fig. 40) fitted with lock nuts. (H, Fig. 40) Loosen the lock nuts and tighten the set screws until slide moves freely without play. Tighten lock nuts to retain adjustment.

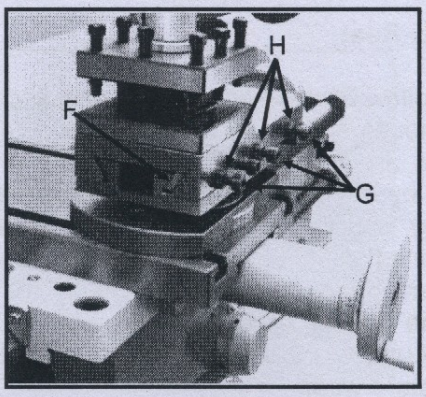

Fig. 40

Adjustment of Half Nut Guide

Loosen the nut (I, Fig.41) on the right side bottom of the apron and adjust the control screws (J, Fig.41) until both half nuts move freely without play. Tighten the nut.

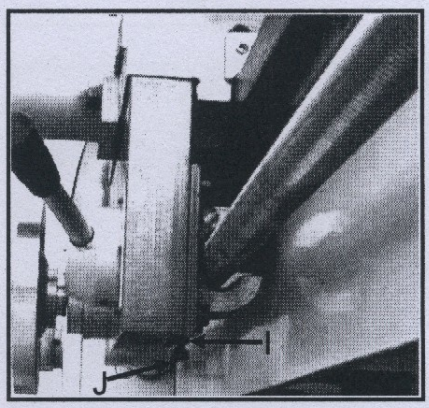

Fig. 41

LUBRICATION

⚠ CAUTION!

Lathe must be serviced at all lubrication points and all reservoirs filled to operating level before the lathe is placed into service!
Failure to comply may cause serious damage!

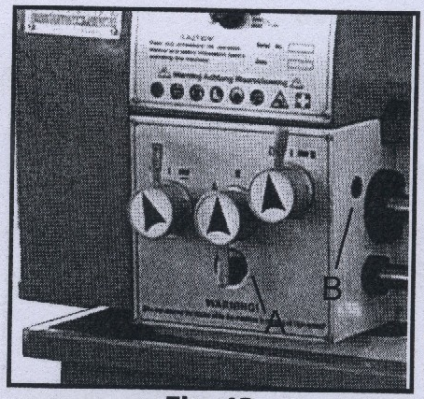

Fig. 42

NOTES:
Lubricate all slideways lightly before every use. Lubricate the change gears and the leadscrew slightly with a lithium-based grease.

1. Gearbox

Oil Must be up to indicator mark in oil sight glass(A,Fig42). Top off with Mobilgear 627 or equivalent. Fill by pulling plug (B, Fig. 42). To drain, remove drain plug on the right side of headstock(C, Fig.43). Drain oil completely and refill after the first three months of operation. Then, change oil in the headstock annually.

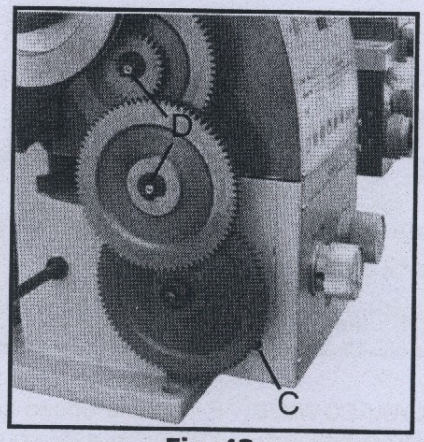

Fig. 43

2. Change Gear

Lubricate two oil ports (D, Fig.43) on the gear shafts with 20W machine oil once daily.

3. Carriage

Lubricate Four oil ports (E, Fig. 44) with 20W machine oil once daily.

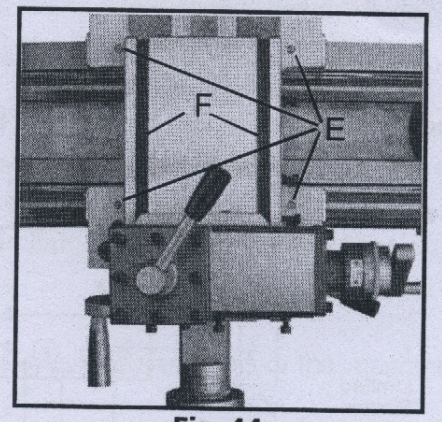

Fig. 44

4. Cross Slide

Lubricate two oil ports (F, Fig. 44) with 20W machine oil once daily.

5. Apron

Lubricate two oil ports (G, Fig. 45) with 20W machine oil once daily.

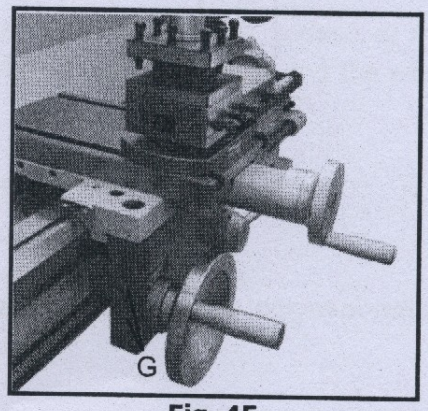

Fig. 45

6. Leadscrew

Lubricate the oil port (A, Fig. 46) with 20W machine oil once daily.

7. Tailstock

Lubricate two oil ports (B, Fig. 46) with 20W machine oil once daily.

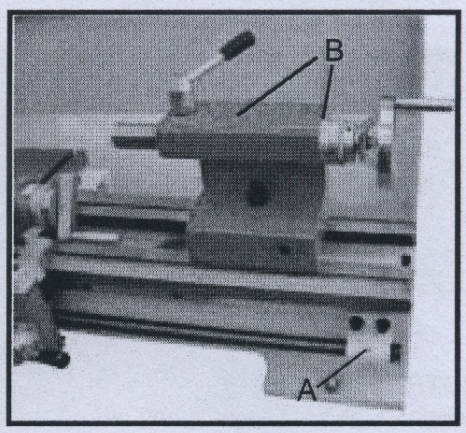

Fig. 46

ELECTRICAL CONNECTIONS

⚠ WARNING!

Connection of the lathe and all other electrical work may only be carried out by an authorized electrician!

Failure to comply may cause serious injury and damage to the machinery and property!

The WARCO WM280V-F Variable Speed Lathe is rated at 900W, 1PH, 240V only. Confirm power available at the lathe's location is the same rating as the lathe. Using the wiring diagram (Fig.47) for connecting the lathe to the mains supply.

Make sure the lathe in properly grounded.

The following is wiring diagram of the lathe: (Fig.47)

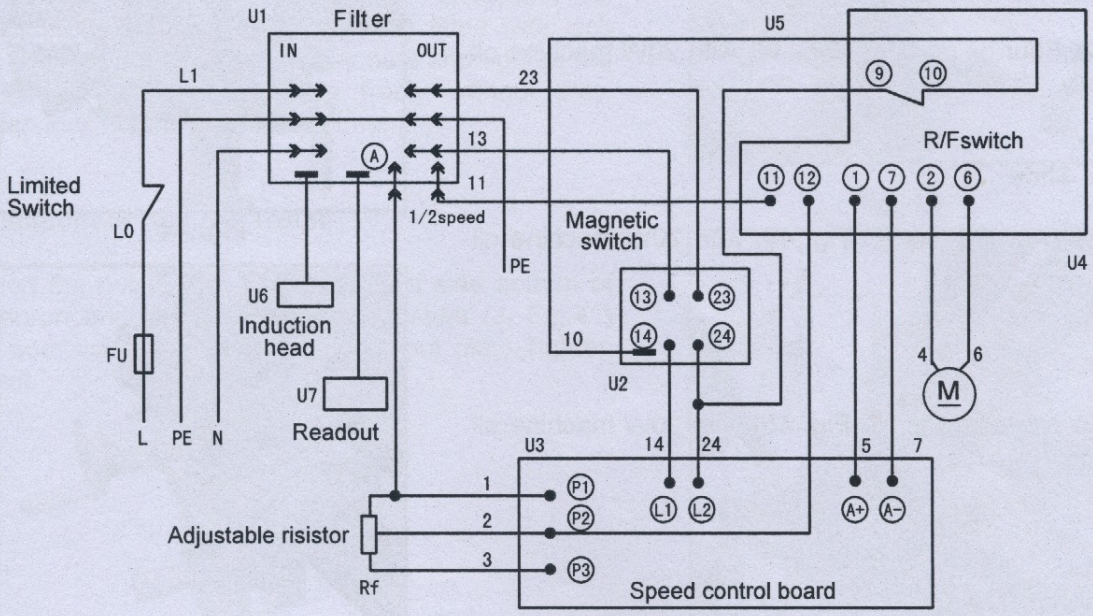

Fig.47

MAINTENANCE

Keep the maintenance of the machine tool during the operation to guarantee the accuracy and service life of the machine tool.

1. In order to retain the machine's precision and functionality, it is essential to treat it with care, keep it clean and grease and lubricate it regularly. Only through good care, you can be sure that the working quality of the machine will remain constant.

NOTES:
Disconnect the machine plug from the mains supply whenever you carry out cleaning, maintenance or repair work!

Oil, grease and cleaning agents are pollutants and must not be disposed of through the drains or in normal refuse. Dispose of those agents in accordance with current legal requirements on the environment. Cleaning rags impregnated with oil, grease and cleaning agents are easily inflammable. Collect cleaning rags or cleaning wool in a suitable closed vessel and dispose of them in an environmentally sound way – do not put them with normal refuse!

2. Lubrication all slideways lightly before every use. The change gears and the leadscrew must also be lightly lubricated with lithium base grease.

3. During the operation, the chips which falls onto the sliding surface should be cleaned timely, and the inspection should be often made to prevent chips falling into the position between the machine tool saddle and lathe bed guide way. Asphalt felt should be cleaned at certain time.

NOTES:
Do not remove the chips with your bare hands. There is a risk of cuts due to sharp-edged chips.
Never use flammable solvents or cleaning agents or agents that generate noxious fumes!
Protect electrical components such as motors, switches, switch boxes, etc., against humidity when cleaning.

4. After the operation every day, eliminate all the chips and clean different part of the machine tool and apply machine tool oil to prevent rusting.

5. In order to maintain the machining accuracy, take care of the center, the surface of the machine tool for the chuck and the guide way and avoid mechanical damage and the wear due to improper guide.

6. If the damage is found, the maintenance should be done immediately.

NOTES:
Repair work may only be carried out by qualified personnel with the corresponding mechanical and electrical knowledge.

TROUBLESHOOTING

Problem	Possible Reason	Elimination
Surface of workpiece too rough	Tool blunt Tool springs Feed too high Radius at the tool tip too small	Resharpen tool Clamp tool with less overhang Reduce feed Increase radius
Workpiece becomes coned	Centers are not aligned (tailstock has offset) Top slide not aligned well (cutting with the top slide)	Adjust tailstock to the center Align top slide well
Lathe is chattering	Feed too high Slack in main bearing	Reduce feed Adjust the main bearing
Center runs hot	Workpiece has expanded	Loosen tailstock center
Tool has a short edge life	Cutting speed too high Crossfeed too high Insufficient cooling	Reduce cutting speed Lower crossfeed(finishing allowance should not exceed 0.5mm) More coolant
Flank wear too high	Clearance angle too small Tool tip not adjusted to center high	Increase clearance angle Correct height adjustment of the tool
Cutting edge breaks off	Wedge angle too small (heat build-up) Grinding crack due to wrong cooling Excessive slack in the spindle bearing Arrangement (vibrations)	Increase wedge angle Cool uniformly Adjust the slack in the spindle bearing arrangement
Cut thread is wrong	Tool is clamped incorrectly or has been started grinding the wrong way Wrong pitch Wrong diameter	Adjust too to the center Grind angle correctly Adjust the right pitch Turn the workpiece to the correct diameter
Spindle does not activate	Emergency stop switch activated	Unlock emergency stop switch

WARCO

PARTS LIST for

WM280V-F

Warren Machine Tools Ltd

Warco House, Fisher Lane, Chiddingfold,Surrey GU84TD

Tel: 01428 682929 Fax: 01428 685870

E-mail: warco@warco.co.uk

Web: www.warco.co.uk

WM280V-F Headstock and Driving Assembly

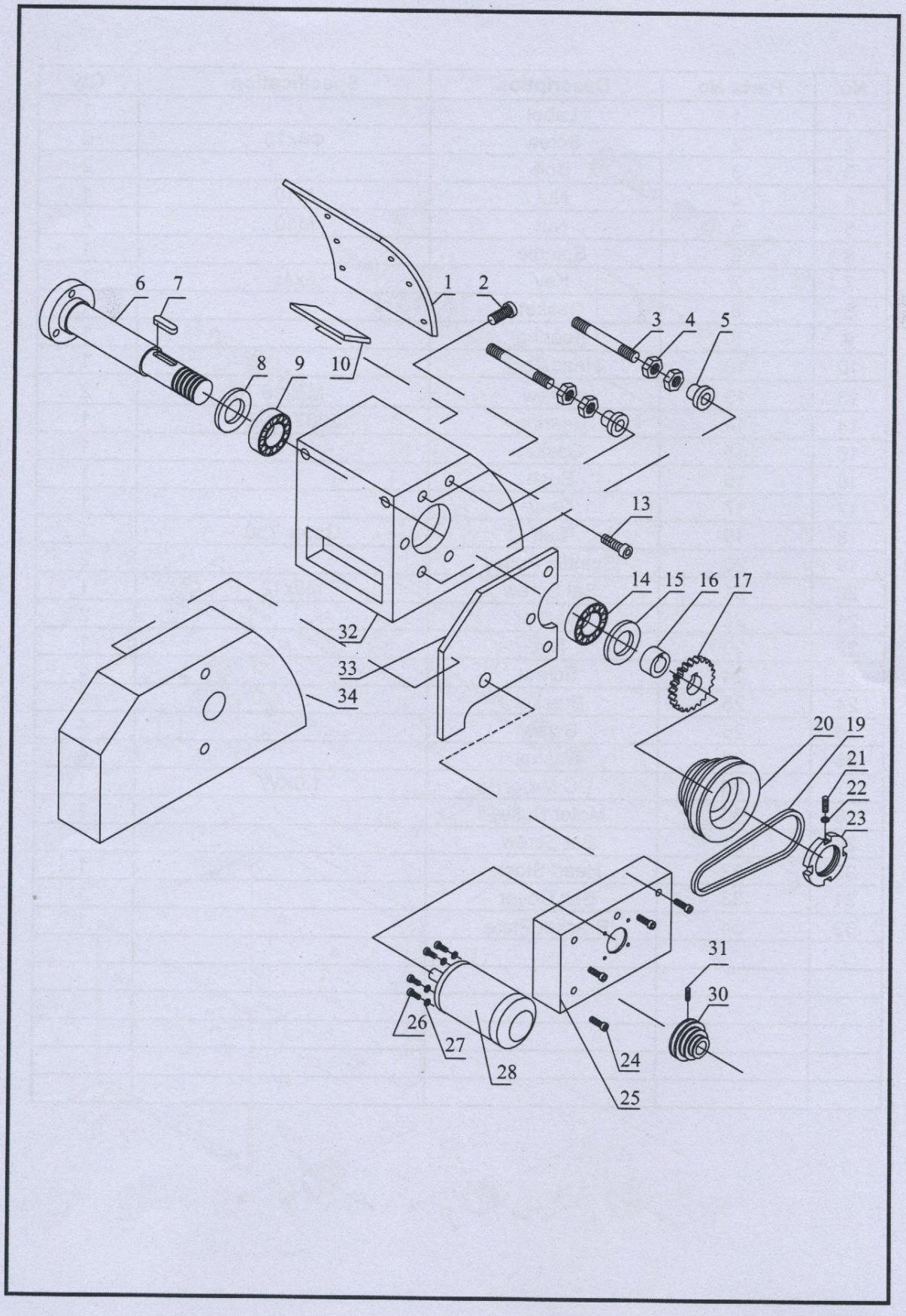

WM280V-F Headstock and Driving Assembly

No.	Parts No.	Description	Specification	Qty
1	1	Label		1
2	2	Screw	Φ4x10	6
3	3	Bolt		2
4	4	Nut	M10	4
5	5	Nut	M10	2
6	6	Spindle		1
7	7	Key	8x45	1
8	8	Gasket		1
9	9	Bearing		1
10	10	Headstock		1
13	13	Screw	M8x25	2
14	14	Bearing	2007109E	1
15	15	Gasket		1
16	16	Bush		1
17	17	Gear		1
18	19	Belt	Gates 730	1
19	20	Spindle Pulley		2
20	21	Set Screw	M5x12	1
21	22	Washer		2
22	23	Nut		1
23	24	Screw		4
24	25	Bracket		1
25	26	Screw		4
26	27	Washer		4
27	28	DC Motor	1.0KW	1
28	30	Motor Pulley		1
29	31	Set Screw		1
30	32	Head Stock		1
31	33	Belt Cover		1
32	34	Bracket Plate		1

WM280V-F Gearbox Assembly

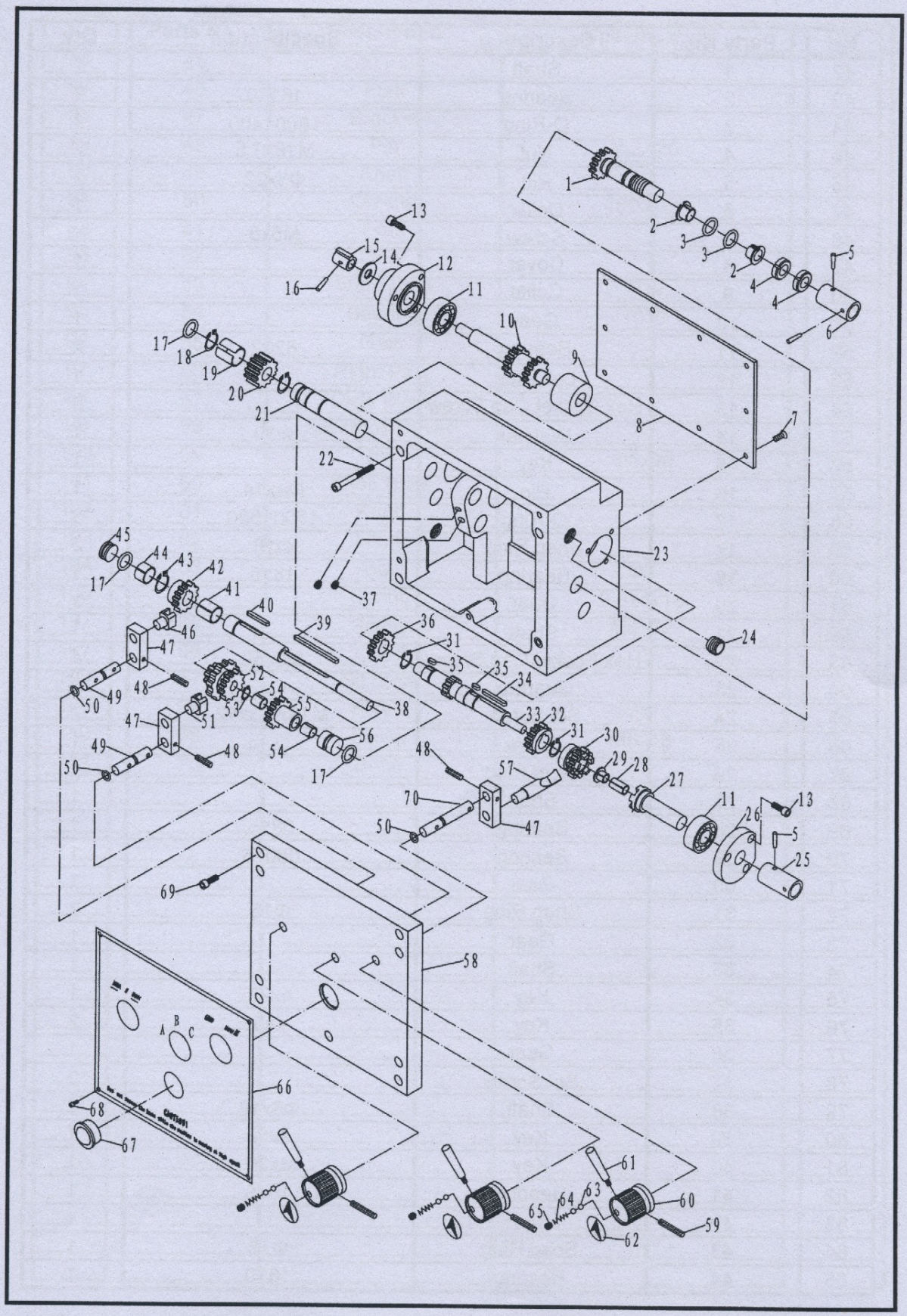

WM280V-F Gearbox Assembly (I)

No	Parts No.	Description	Specification	Qty
42	1	Shaft		1
43	2	Bearing	16170	2
44	3	O-Ring	18001400	2
45	4	Nut	M16x1.5	2
46	5	Pin	Φ3x22	2
47	6	Collar		1
48	7	Screw	M5x8	10
49	8	Cover		1
50	9	Collar		1
51	10	Gear		1
52	11	Bearing	6202	2
53	12	Left Plug		1
54	13	Hex Socket Cap Screw		6
55	14	Washer	Φ10	1
56	15	Key		1
57	16	Pin	Φ4x14	1
58	17	O-Ring	18001500	3
59	18	Snap Ring	Φ18	2
60	19	Bearing	1815	1
61	20	Gear		1
62	21	Shaft		1
63	22	Hex Socket Cap Screw	M6x50	4
64	23	Gearbox		1
65	24	Set Screw	M16x1.5x12	2
66	25	Collar		1
67	26	Right Plug		1
68	27	Shaft		1
69	28	Bearing	0815	1
70	29	Bearing	08075	1
71	30	Gear		1
72	31	Snap Ring	Φ15	2
73	32	Gear		1
74	33	Shaft		1
75	34	Key	4x25	1
76	35	Key	4x8	2
77	36	Gear		1
78	37	Set Screw		2
79	38	Shaft	Φ6x18	1
80	39	Key	4x50	1
81	40	Key	4x20	1
82	41	Bearing	1615	1
83	42	Gear		1
84	43	Snap Ring	Φ16	1
85	44	Bearing	1610	1

WM280V-F Gearbox Assembly (II)

No	Parts No.	Description	Specification	Qty
86	45	Left Plug		1
87	46	Fork		1
88	47	Bracket		3
89	48	Pin	Φ3X20	3
90	49	Shaft		2
91	50	O-Ring	1800690	3
92	51	Fork		1
93	52	Gear		1
94	53	Snap Ring	Φ10	1
95	54	Bearing	1010	2
96	55	Gear		1
97	56	Right Plug		1
98	57	Dials Block		1
99	58	Gearbox Cover		1
100	59	Pin	Φ5x40	3
101	60	Knob Base		3
102	61	Knob		3
103	62	Label		3
104	63	Ball	Φ5	6
105	64	Spring	0.8x4x16	3
10	65	Screw	M6x12	3
107	66	Label		1
108	67	Oil Sight		1
109	68	Screw	M3x16	4
110	69	Screw	M5x16	5
111	70	Shaft		1

WM280V-F Top slide Cross slide , Carriage Assembly

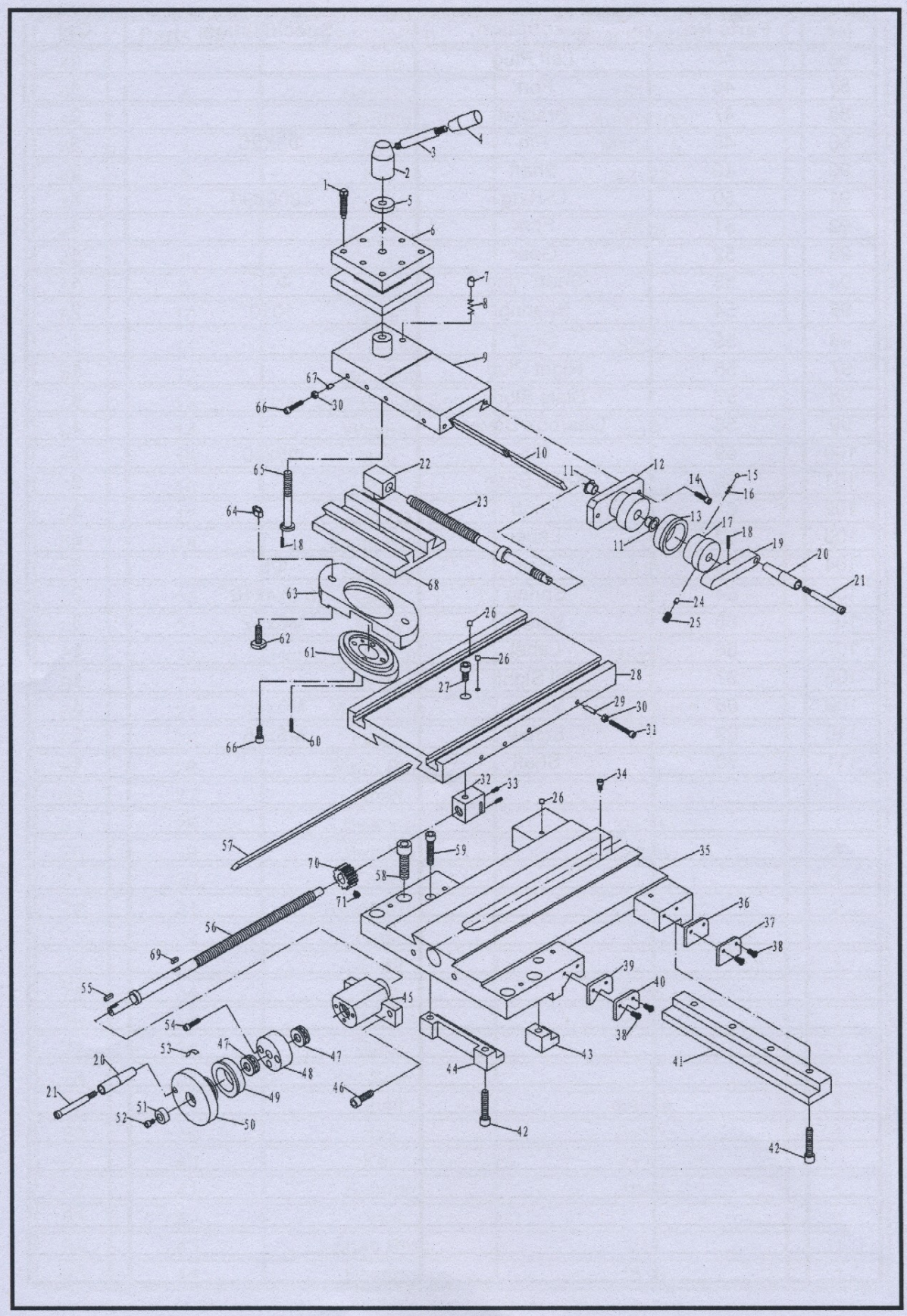

WM280V-F Top slide Cross slide , Carriage Assembly (I)

No	Parts No.	Description	Specification	Qty
112	1	Screw	M8x30	8
113	2	Handle Base		1
114	3	Handle Shaft		1
115	4	Knob		1
116	5	Washer		1
117	6	Post Base		1
118	7	Stop		1
119	8	Spring	7x0.8x11	1
120	9	Top Slide		1
121	10	Gib		1
122	11	Washer		2
123	12	Hub		1
124	13	Index Ring		1
125	14	Hex Socket Cap Screw	M6x20	2
126	15	Ball	Φ5	1
127	16	Spring	1.5x0.5x6.5	1
128	17	Index Base		1
129	18	Pin	Φ3x16	2
130	19	Lever		1
131	20	Lever		2
132	21	Lever Shaft		2
133	22	Block		1
134	23	Screw		1
135	24	plug		3
136	25	Set Screw	M6x10	3
137	26	Oil Ball		7
138	27	Hex Socket Cap Screw	M8x10	1
139	28	Cross Slide		1
140	29	plug		4
141	30	Hex Nut	M6	8
142	31	Hex Socket Cap Screw	M6x30	4
143	32	Block		1
144	33	Set Screw	M4x8	2
145	34	Hex Socket Cap Screw	M5x6	1
146	35	Saddle		1
147	36	Wiper		2
148	37	Plate		2
149	38	Screw	M4x18	8
150	39	Wiper		2
151	40	Plate		2
152	41	Strip		1
153	42	Hex Socket Cap Screw	M8x30	5
154	43	Strip		1
155	44	Strip		1

WM280V-F Top slide Cross slide , Carriage Assembly (II)

No	Parts No.	Description	Specification	Qty
156	45	Bracket		1
157	46	Hex Socket Cap Screw	M5x20	3
158	47	Bearing	51101	1
159	48	Collar		1
160	49	Index Ring		1
161	50	Handlewhere		1
162	51	Washer		1
163	52	Hex Socket Cap Screw	M5x10	1
164	53	Spring		1
165	54	Hex Socket Cap Screw	M5x20	3
166	55	Key		1
167	56	leadscrew		1
168	57	Gib		1
169	58	Hex Socket Cap Screw	M12x30	2
170	59	Hex Socket Cap Screw	M8x40	2
171	60	Pin	Φ4x20	1
172	61	Graduated Collar		1
173	62	T-Bolt	M10x30	2
174	63	Clamping Ring		1
175	64	Nut	M10	2
176	65	Bolt		1
177	66	Hex Socket Cap Screw	M6x16	8
178	67	plug		4
179	68	Swivel Base		1
180	69	Key	4x10	1
181	70	Gear		1
182	71	Set Screw	M5x16	1

WM280V-F Apron Assembly

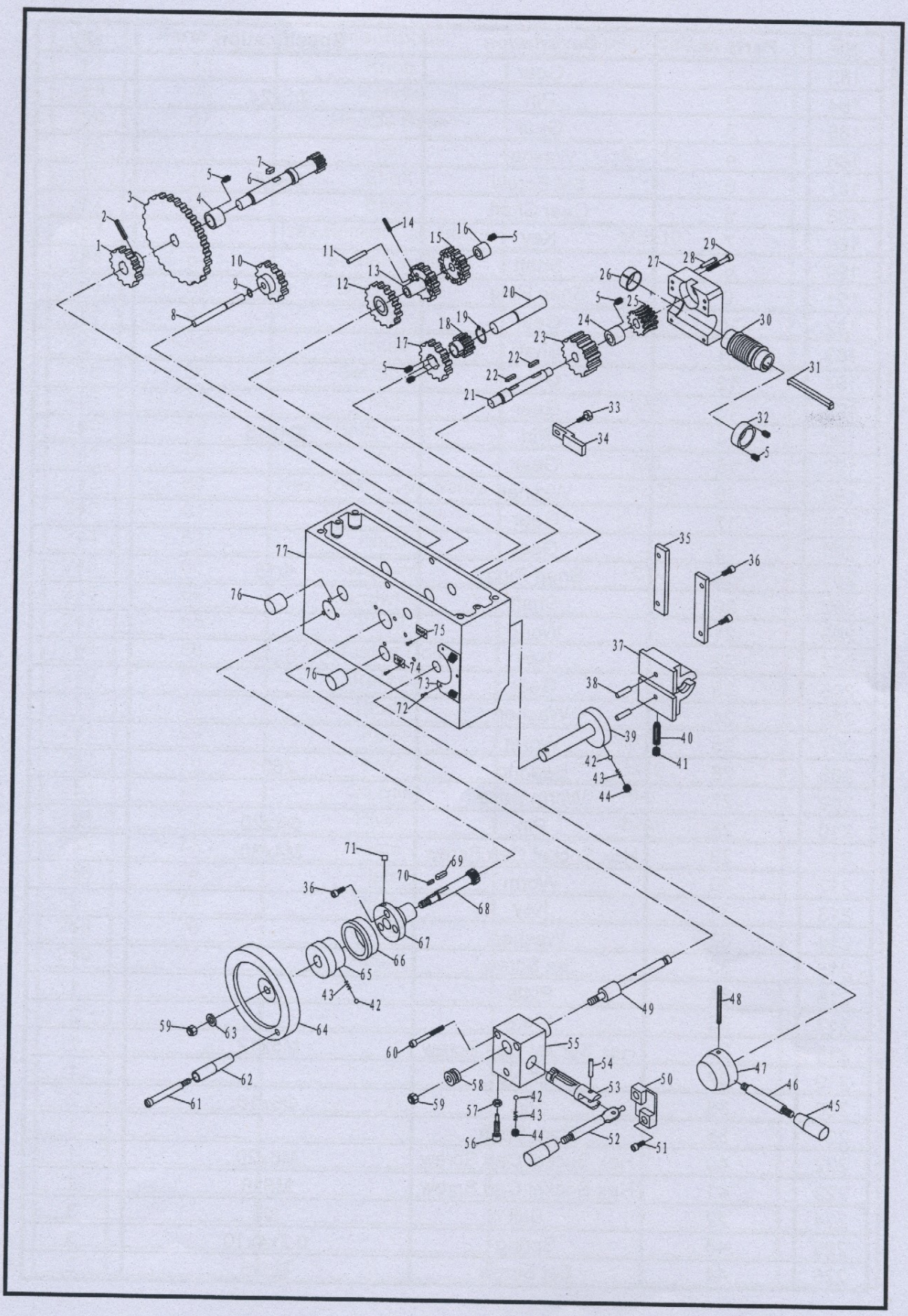

WM280V-F Apron Assembly (I)

No	Parts No.	Description	Specification	Qty
183	1	Gear		1
184	2	Pin	Φ5x24	1
185	3	Gear		1
186	4	Washer		1
187	5	Set Screw	M4x8	7
188	6	Gear Shaft		1
189	7	Key		1
190	8	Shaft		1
191	9	Snap Ring	Φ8	1
192	10	Gear		1
193	11	Shaft		3
194	12	Gear		1
195	13	Gear		1
196	14	Pin	Φ4x16	1
197	15	Gear		1
198	16	Washer		1
199	17	Gear		1
200	18	Gear		1
201	19	Snap Ring	Φ15	1
202	20	Shaft		1
203	21	Worm		1
204	22	Key	5x14	2
205	23	Gear		1
206	24	Washer		1
207	25	Worm		1
208	26	Bearing	2501	1
209	27	Worm Base		1
210	28	Pin	Φ4x20	2
211	29	Hex Socket Cap Screw	M4x30	4
212	30	Worm		1
213	31	Key		1
214	32	Washer		1
215	33	Set Screw		1
216	34	Plate		1
217	35	Plate		2
218	36	Hex Socket Cap Screw	M5x12	7
219	37	Half Nut		1
220	38	Pin	Φ6x18	2
221	39	Cam Shaft		1
222	40	Hex Socket Cap Screw	M6x20	1
223	41	Hex Socket Cap Screw	M6x8	1
224	42	Ball	Φ5	3
225	43	Spring	0.7x4x10	3
226	44	Set Screw	M6x6	2

WM280V-F Apron Assembly (II)

No	Parts No.	Description	Specification	Qty
227	45	Knob		2
228	46	Handle		1
229	47	Handle Base		1
230	48	Pin	Φ5x45	1
231	49	Shaft		1
232	50	Base		1
233	51	Hex Socket Cap Screw	M5x10	6
234	52	Shaft Handle		1
235	53	Shaft Forx		1
236	54	Pin	Φ5x20	1
237	55	Base		1
238	56	Set Screw		1
239	57	Nut	M6	1
240	58	Shift Lever		1
241	59	Nut	M8	2
242	60	Hex Socket Cap Screw	M5x35	2
243	61	Shaft Handle		1
244	62	Knob		1
245	63	washer	Φ8	1
246	64	Handwheel		1
247	65	Shaft		1
248	66	Graduated Collar		1
249	67	Bracket		1
250	68	Shaft		1
251	69	Key	5x14	1
252	70	Key	3x10	1
253	71	Oil Ball	Φ6	1
254	72	Rivet	Φ2x6	7
255	73	Plate		1
256	74	Plate		1
257	75	Plate		1
258	76	Collar		2
259	77	Apron		1

WM280V-F Tailstock, Bed Assembly

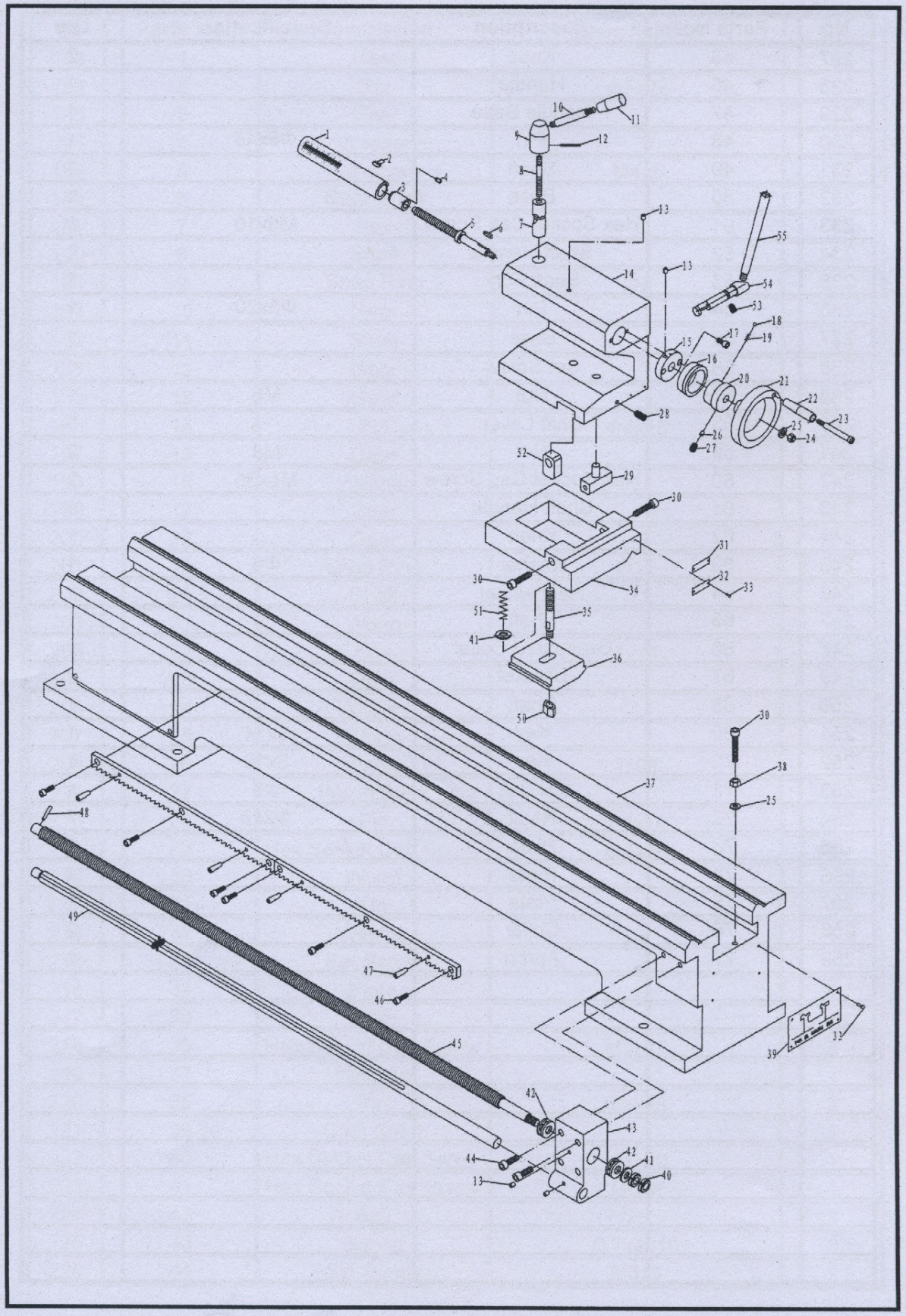

WM280V-F Tailstock, Bed Assembly (I)

No	Parts No.	Description	Specification	Qty
260	1	Quill		1
261	2	Key		1
262	3	Nut		1
263	4	Set Screw	M6x10	1
264	5	Screw		1
265	6	Key	4x10	1
266	7	Pivot Block		1
267	8	Screw		1
268	9	Handle Base		1
269	10	Handle Shaft		1
270	11	Knob	M8	1
271	12	Pin	Φ3x30	1
272	13	Oil Ball	Φ6	4
273	14	Tailstock body		1
274	15	Flange Cover		1
275	16	Index Ring		1
276	17	Hex Socket Cap Screw	M6x10	2
277	18	Ball	Φ4	1
278	19	Spring	Φ4x1x6	1
279	20	Sleeve		1
280	21	Handwheel		1
281	22	Knob		1
282	23	Screw		1
283	24	Nut	M8	1
284	25	Washer	Φ8	6
285	26	Brake Block		1
286	27	Hex Socket Cap Screw	M6x10	1
287	28	Hex Socket Cap Screw	M6x16	1
288	29	Set Screw		1
289	30	Hex Socket Cap Screw	M8x40	3
290	31	Plate		1
291	32	Plate		1
292	33	Rivet	Φ2x6	8
293	34	Base		1
294	35	Bolt		1
295	36	Clamping Plate		1
296	37	Bed		1
297	38	Nut	M8	5
298	39	Plate		1
299	40	Nut	M12x1.25	2
300	41	Washer	Φ12	2
301	42	Bearing	51102	2
302	43	Bracket		1
303	44	Hex Socket Cap Screw	M8x20	2

WM280V-F Tailstock, Bed Assembly (II)

No	Parts No.	Description	Specification	Qty
304	45	Feed Shaft		1
305	46	Hex Socket Cap Screw	M6x15	6
306	47	Pin	Φ6x20	4
307	48	Pin	Φ4x22	1
308	49	Shaft		1
309	50	Nut	M12	1
310	51	Spring	Φ13x1x62	1
311	52	Brake Block		1
312	53	Set Screw	M6x10	1
313	54	Shaft		1
314	55	Handle		1

WM280V-F ELECTRICAL BOX ASSEMBLY

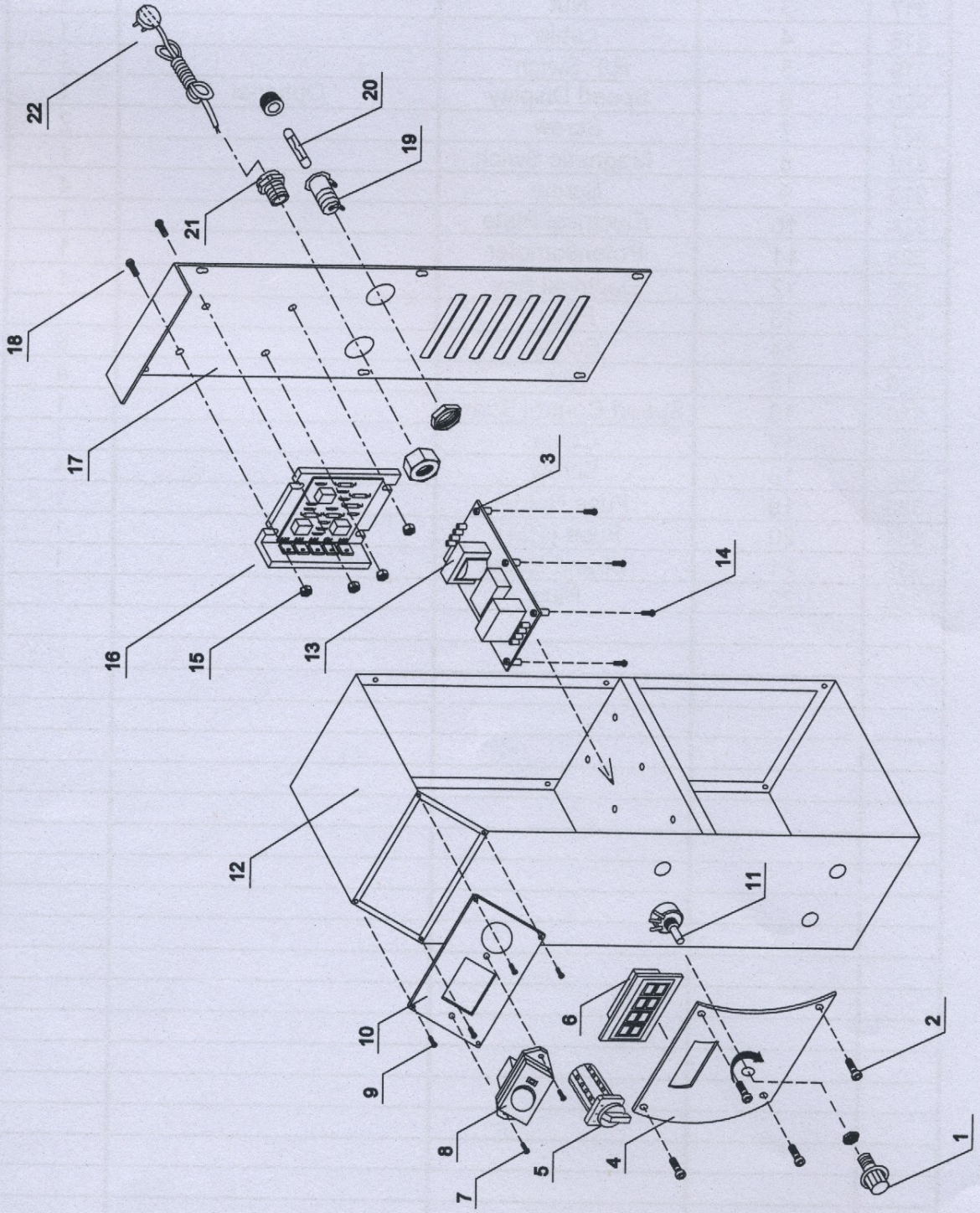

WM280V-F ELECTRICAL BOX ASSEMBLY

No	Parts No.	Description	Specification	Qty
315	1	Timing Knob		1
316	2	Screw		4
317	3	Nut		4
318	4	Lable		1
319	5	R/F Swich		1
320	6	Speed Display	Optional	1
321	7	Screw		2
322	8	Magnetic Swich		1
323	9	Screw		4
324	10	Electrical Plate		1
325	11	Potentiometer		1
326	12	Electrical Box		1
327	13	Filter		1
328	14	Screw		6
329	15	Nut		4
330	16	Speed Control Board		1
331	17	Cover		1
332	18	Screw		4
333	19	Fuse Holder		1
334	20	Fuse (10A)		1
335	21	Strand Relief		1
336	22	Plug		1